Regenerative braking of electric vehicles

Valentin Totev
Faculty of Electrical Engineering
Technical University - Sofia
Sofia, Bulgaria
valentintotev@tu-sofia.bg

Vultchan Gueorgiev
Faculty of Electrical Engineering
Technical University - Sofia
Sofia, Bulgaria
vulchy@tu-sofia.bg

Plamen Rizov
Faculty of Electrical Engineering
Technical University - Sofia
Sofia, Bulgaria
pmri@tu-sofia.bg

***Abstract*—This paper presents a discussion about regenerative braking of electric vehicles (EVs). The paper is made with a purpose to inform in a concise way the essence of regenerative braking and different methods, utilized to accumulate recuperated energy. Electric vehicles are a broad but very exciting and rapidly spreading topic concerning the following needs and factors: to lower emissions in the environment, to use green energy sources, increased energy demand and consumption etc. Regenerative braking is a process of deceleration of an electric vehicle (plug-in or hybrid) by converting mechanical energy to electrical via generator operation of its motor, while also providing brake torque, and further accumulating it in storage systems. This process extends their range or lowers fuel consumption respectively. With expanding research and development of EVs on a worldwide scale regenerative braking of those vehicles as a topic is notably relevant.**

Keywords—electric vehicles, electric cars, plug- in EV, regenerative braking

I. Introduction

Electric vehicles as part of the environmentally friendly means of transport are considered as one of the rapidly growing and researched solutions to lower CO_2 emissions which are the main factor of global warming. EVs can be characterized with a variety of advantages over fossil fuelled automobiles with internal combustion engines (ICE). Some of them are operation with lack of release of emissions such as CO_2, nitrogen oxides (NO_x), carbon monoxide (CO), volatile organic compounds (VOC) and unburned hydrocarbons (UHC); highly efficient drivetrains; flexibility of charging; lower maintenance expenses; lack of noise pollution and energy recovery by regenerative braking. Disadvantages of EVs mainly consist of disadvantages of their batteries. The mentioned lack of noise pollution also can be treated as hazardous, especially when an EV is approaching from behind.

Process of braking is one of- if not the most important matter of motion. During braking energy of friction (mechanical) is converted to heat and thus wasted. Electric vehicles recover part of that energy by regenerative braking. Regenerative braking is a widely studied and known process found in traction of railways, trams and trolleybuses but appears as a nuance to automobiles. The process also benefits them by extension of their drive range or just by powering electrical accessories. EVs also incorporate a typical mechanical brake system used for emergency stops with shorter brake times. Further discussion of regenerative braking will be presented in following chapters.

Like any other automobile EV's also have a friction based braking system incorporated.

II. Factors influencing regenerative braking

A lot of time-dependant and time-varying factors influence an EV operation which also influence petrol fuelled automobiles. These factors can be divided as subjective and objective. Subjective factors have smaller influence, while objective factors which are not human dependant mainly consist of climate conditions, road conditions, etc. Subjective factors can be mainly described by way of driving and partly the value of state of charge (SoC).

Fig.1 presents an exemplary block diagram of main components concerning regenerative braking system (RBS). Marked positions have the following meanings: 1- battery package; 2- inverter; 3- motor; 4- ultracapacitor; 5- DC/ DC buck- boost converter.

A. Motor and Inverter

Motor is the driving unit of an EV. In regenerative braking it operates as a generator due to the reversibility of electric machines. Most typically utilized motors are induction motor (IM), permanent magnet synchronous motor (PMSM), brushless dc motor (BLDC), switched reluctance motor (SRM). These types are motors usually with three-phase stator coils which explains the need of an inverter to connect them to the battery package. Permanent magnet synchronous motors are one of the preferred types electric motors by automobile manufacturers to implement in their electric vehicles. Their construction consists of three- phase stator coil and a permanent magnet rotor. There are two types of such machines. They are surface mounted permanent magnet synchronous motor SMPMSM (also called 'outrunner' type) and interior permanent magnet synchronous motor IPMSM (also called 'inrunner' type). Difference between the two types is where the magnets are mounted [15]. A BLDC motor is practically a variation of a PMSM. Their difference lies in the form of their back electromotive force (back EMF) induced, following Lenz's law. A PMSM has sinusoidal back EMF, while a BLDC is characterized with a trapezoidal back EMF [16]. An SRM on the other hand can be classified as a stepper motor.

Proper control of EV's electric machine is an exceptionally important but not a simple to perform task for it to operate in both propelling and regenerative braking modes. The complexity of this task derives from a variety of factors such as road conditions, Generally, different motors are controlled by different methods. Most typically used control methods of the aforementioned types of motors are: variable voltage variable frequency (VVVF), field oriented control (FOC), direct torque control (DTC), PI or PID control and many others.

978-1-7281-2697-5/19/$31.00 ©2019 IEEE

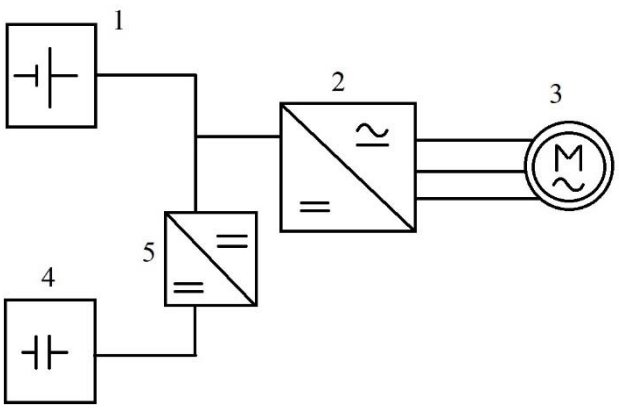

Fig. 1. Exemplary block diagram of the main components of a regeneration braking system in an EV without controllers

There is a rise of application of modern methods, such as adaptive control, fuzzy logic control, artificial neuro network control, expert systems [9, 13, 17]

Control operations are done based on a mathematical models, represented by equations describing unambiguously their parameters in different operating conditions. Generally, for machines like the aforementioned control is done based on their model in a rotating reference frame. This is obtained by performing Clarke and Park transformation (dq0 transformation) [15]. Therefore, equations below have d and q indices representing each respective axis. An important parameter which has to be determined in machines with permanent magnets is the position of the rotor. Based on its position the controlled sequence of switching elements is done. To determine a rotor's position, typically used are encoders or Hall's sensors.

An idealized PMSM with three stator coils and which rotor is represented by three coils (one for excitation and two damper. Representative equations are [15, 16, 21]:

$$u_q = r_s i_q + \frac{d\psi_q}{dt} + \omega_r \psi_d, V \quad (1)$$

$$u_d = r_s i_d + \frac{d\psi_d}{dt} - \omega_r \psi_q, V \quad (2)$$

where r_s is stator coil resistance, Ω; i_d and i_q are current vectors in d and q axes respectively, A; u_d and u_q are voltage vectors in d and q axes respectively, V; ψ_d and ψ_q (λ_d and λ_q) are d- and q- axes flux linkages, Wb; $d\psi_d/dt$ and $d\psi_q/dt$ are d and q EMF respectively, V; ω_r is rotor's electrical angular speed, s^{-1} and product of ω_r and ψ gives respective axis' EMF of rotation, V. Indices s, f, y have the following meaning stator, excitation and damper respectively

Flux linkages are defined by:

$$\psi_d = L_d i_d + L_{kf} i_f + L_{kd} i_{yd}, Wb \quad (3)$$

$$\psi_q = L_q i_q - L_{kq} i_{kq}, Wb \quad (4)$$

where L_d and L_q are d and q axes' inductances, while L_k are mutual inductances and each of them is as defined as $L_{kf} = \sqrt{\frac{3}{2}} M_{sf}$; $L_{kd} = \sqrt{\frac{3}{2}} M_{syd}$; $L_{kq} = \sqrt{\frac{3}{2}} M_{syq}$. Indices s, f, y mark stator, excitation and damper quantities respectively.

After some simplifications and transformations we obtain the following equation for the machine's electromagnetic torque T_e:

$$T_e = \frac{3}{2} p(\psi_d i_q - \psi_q i_d), Nm \quad (5)$$

where p is number of pole pairs.

Equation of motion looks like:

$$T_e = T_L + B\omega_m + J\left(\frac{d\omega_m}{dt}\right), Nm \quad (6)$$

where T_L is load torque, Nm; $B\omega_m$ gives friction torque as B is friction coefficient in Nm.s and ω_m is mechanical angular speed, s^{-1}; J is motor's inertia and $d\omega_m/dt$ is acceleration.

In order to maximize regenerative braking's efficiency it is required that the demanded brake torque by the driver has to be lower or equal to the brake torque which the motor can deliver. Otherwise mechanical brakes are used in addition.

In- depth studies of regenerative braking by a BLDC motor can be found in [5, 9, 10]

The inverter is a power electronic device which converts DC energy to AC energy and vice versa (bidirectional inverter) which is used to feed and control the motor with variable voltage amplitude and variable frequency. Generally, since the motors have a three-phase stator coils, the inverter is also with three phases. MOSFET and IGBT devices are the most common in high-power applications due to their low output impedances" [5, 9]. A simple but very effective way of presenting switching sequence is to study part of the bridge. Chen C.-H., Chi W.-C. & Cheng M.-Y. present three strategies depending on operating number of power switches in [8].

In- depth studies of utilized bidirectional inverter are present in [5, 8, 10, 11]

B. Battery Package

An EV's battery package consists of modules. Each module contains a defined number of batteries connected in series and parallel to obtain necessary voltage and capacity. Most commonly used batteries nowadays are lithium- ion (Li-ion). Every EV manufacturer incorporates different metals in their batteries' structure to enhance different aspects. Some of those metals are aluminium (Al), cobalt (Co), nickel (Ni), manganese (Mn), titanium (Ti) and a compound material iron phosphate ($FePO_4$). The battery package is controlled by a battery management system (BMS) which purpose is to spread battery load and wear evenly during both discharge and charge processes.

An important requirement to take note on is that every type of battery has a different method of charge. Li- ion batteries are charged by the way of constant current- constant voltage. The name of the method stems from the regions of charging characteristics. A constant current value must be maintained until the battery is charged to its rated voltage, which for Li-ion batteries is 4.2 V. After this point the voltage is kept at a constant value, while the current steadily lowers its value.

An in-depth study of different batteries and ultracapacitors and comparing them to one another is done by Burke. A. in [18].

C. Ultracapacitors and DC/ DC buck- boost converter

Ultracapacitors are proposed as an addition to the storage systems due to their advantages which are as follows: improving batteries' lifetime, stores regenerated energy when battery has high SoC, rapid charge and discharge processes and others as mentioned before.

A DC/ DC buck- boost converter typically is connected, since ultracapacitors operate on lower voltages in comparison to the traction battery. The converter operates in two modes in which the magnitude of output voltage is lower than the input voltage (buck) while in the other its magnitude is higher than the input one (boost). Hence where its name stems from. Typically, ultracapacitors are charged during buck operation [11,14].

In-depth studies of ultracapacitors are present in [3, 4, 6, 10, 11, 14].

There might be an operation in which the motor regenerates while the battery is discharging. This can occur when accessories consume more energy than the motor can regenerate [12].

III. Regenerative braking

Electric energy derived while regenerative braking is typically stored in storage systems. Generally used storage systems are batteries. Improved development has given rise to ultracapacitors (UC) as storage systems in EV applications. Ultracapacitors have faster transient processes, longevity and higher power density but lower energy density when compared to batteries [3, 10, 14]. Commonly ultracapacitors are implemented in addition to batteries in order to improve batteries' lifetime [4]. Typically, UCs operate with a DC/ DC buck- boost converter. There are some studies utilizing flywheels as an addition to the storage system [7, 11].

We have discussed the advantages of regenerative braking, but as any other process it has its disadvantages also. Some of them are as follows: regenerative braking can be applied only on the axle driven by the motor; its effect can be utilized only for demanded brake torques which are lower or equal to the delivered brake torque by the motor; RBS cannot deliver necessary brake torques alone for emergency stops; whenever batteries' SoC is above a given value, batteries cannot be charged during regeneration, etc.

Mechanical brakes are always applied on the axle which is not driven by the motor, and applied on the driven axle whenever demanded brake torque exceeds regeneration potential; whenever battery has high SoC. Mechanical brakes also serve as a way of safety if an electric fault occurs in RBS.

An in-depth discussion of distribution between conventional brakes and regenerative braking system for HEVs is presented in [3]

Regenerative braking as a process begins even from the moment when the pressure over the accelerator from the foot is released. This is due to difference in the values of voltages of input and output sides of inverter. In a similar way by controlling electrical quantities the braking control unit (BCU) controls the strength of regeneration, seen as different drive modes. As stated in [1], regenerative braking force is determined by the BCU by comparing demanded brake torque with available motor torque. This fact gives rise to the opportunity of driving an EV with a single pedal (one pedal drive). An in-depth study and proposal of such one pedal driving is presented in [19].

Regenerative braking classifies as parallel and series according to the way of distribution of brake force between RBS and conventional friction brake system. [1] – [3].

Parallel regenerative braking system is based on simultaneous operation of regenerative braking and mechanical brakes. Mechanical braking force in this system is always applied when brake pedal is depressed and its value is determined by the brake pedal, hence cannot be controlled otherwise. Regenerative braking force is added to the mechanical.

Parallel regenerative braking has the advantages of simple system and lack of need of brake-by-wire system over the series system.

Serial or series regenerative braking is also based on a combination of both brake configurations. It is also called a torque blending regenerative braking. When braking with low demand deceleration rates, regenerative braking force has priority. Mechanical brakes are applied only when regeneration cannot supply to driver's demand. This system has more complex control, requires brake-by-wire technology, but is more efficient in terms of recuperated energy and gives better results for "fuel" consumption, compared to parallel system, in regard to hybrid EVs.

Fig.2 presents distribution of brake torque in parallel regenerative braking system, while Fig.3 presents the same distribution in series regenerative braking system, as shown by Varocky in [1]. On both figures the part consisting "compression regen" defines the regeneration during the period when the EV is coasting [1].

On Fig. 4 we present an exemplary block diagram showing the paths of energy flows during driving and regenerative braking by using the same arrangement as in Fig.1. On it with blue arrows is shown the path of energy flow during driving, i.e. the motor consumes energy from the battery to propel the EV. With green arrows are shown the paths during regenerative braking – either charging the battery, or charging the capacitor bank.

IV. Brake force distribution

As mentioned before objective factors influence EVs as well as conventional automobiles. Generally, a vehicle has to overcome the resistances described below. The deceleration force F_{dec} is given by:

$$F_{dec} = m_{veh}\frac{dv(t)}{dt} = F_t - F_a - F_r - F_g, N \quad (7)$$

where m_{veh} is vehicle mass, kg; dv(t)/dt is acceleration or deceleration, m/s^2; F_t is traction force, N; F_a is aerodynamic resistance force, N; F_r is rolling resistance force, N; F_g is so called uphill (slope) driving force, N.

$$F_a = \frac{1}{2}\rho_a S_{fr} C_d v^2, N \quad (8)$$

where ρ_a is air density, kg/m^3; S_{fr} is frontal area, m^2; C_d is drag coefficient; v is vehicle's velocity, m/s

$$F_r = C_r m_{veh} g cos(\alpha), N \quad (9)$$

where C_r is rolling friction coefficient; g is gravitational acceleration, m/s^2; α is slope angle, degrees.

$$F_g = m_{veh} g sin(\alpha), N \quad (10)$$

$$P_{dec} = F_{dec} v, W \quad (11)$$

where P_{dec} is required power to decelerate, W.

$$P_{dec} = P_{front} + P_{rear}, W \quad (12)$$

where P_{front} and P_{rear} are powers provided to front and rear wheels respectively, W.

$$P_{mot-el} = P_{dec} \eta_g \eta_m, W \quad (13)$$

where P_{mot-el} is motor's electric power, W; η_g is efficiency of gear and η_m is motor's efficiency. Efficiency of the gear is assumed to be constant, while motor's efficiency is given by (14) [12].

$$\eta_m = \frac{T_m \omega_m}{(T_m \omega_m + k_c T_m^2 + k_i \omega_m + k_w \omega_m^3 + C)} \quad (14)$$

where T_m is motor's braking torque, Nm; ω_m is motor's angular velocity, s^{-1}; k_c is coefficient of copper losses; k_i is coefficient of iron losses; k_w is coefficient of losses in windings and C represents constant losses.

Equations (7) to (14) are derived from studies presented in [1, 2, 9, 12, 20].

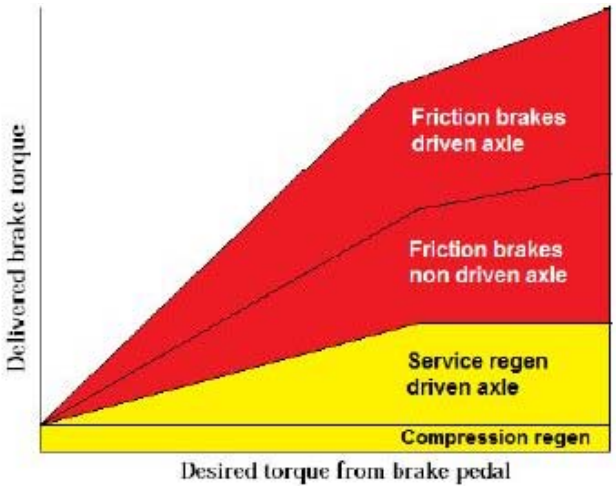

Fig. 2. Parallel regenerative braking (fig. by Varocky [1])

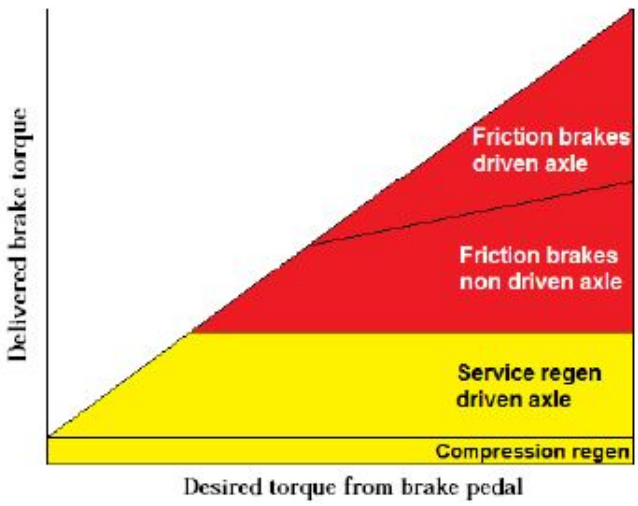

Fig. 3. Series regenerative braking (fig. by Varocky [1])

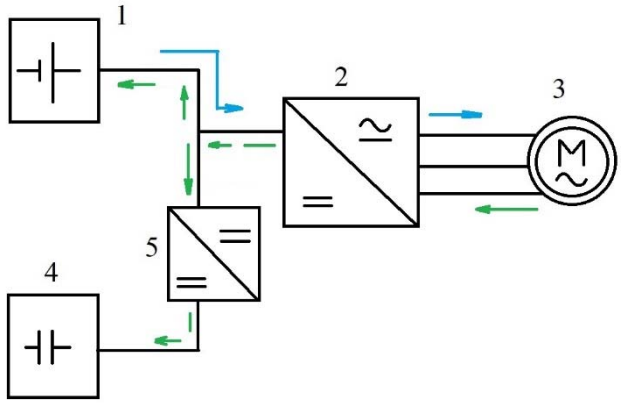

Fig. 4. Exemplary block diagram with energy flow paths

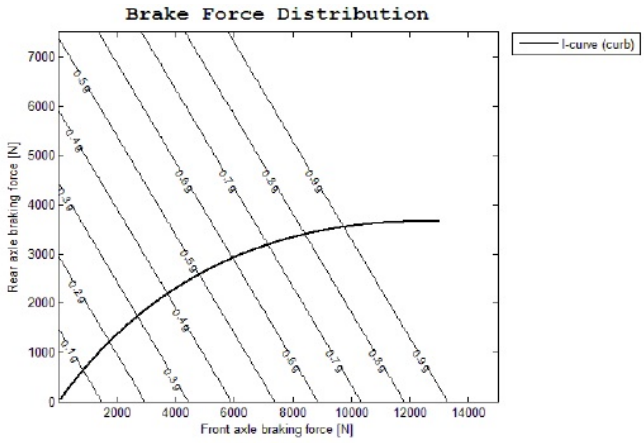

Fig. 5. Ideal brake distribution curve (fig. by Boerboom [2])

Brake systems distribute required brake forces on one hand between both wheel axles and on the other – between friction braking and regenerative braking [1-3]. A necessary condition which must be complied with is that distribution of brake forces must be performed in such a way that the vehicle does not lose its stability and maneuverability. Therefore, EV's also incorporate anti-lock brake systems (ABS) [2, 6].

"Ideal distribution of brake force between front and rear axles describes the ideal brake distribution curve or I-curve. This is a hyperbolic curve which marks the points of deceleration where both front and rear wheels lock up at the same time. Whenever the ratio results below the I-curve, brake forces are biased to the front wheels and whenever it results above – brake forces are biased to the rear wheels" [2]. Fig.5 presents an ideal brake distribution curve, by Boerboom in [2].

A point which must be noted is that distribution of brake forces and preserving of vehicle's stability must be done in such a way that is comfortable for the driver and passengers.

V. Conclusions

This paper presented key points of information and the essence of regenerative braking in a more concise way. Topics such as electric vehicles which are significantly broad and modern always pick at one's interest. Worldwide efforts are spent in research and development. Regenerative braking as a beneficial way of deceleration of an EV by itself is also very exciting and broad topic. It can increase the vehicle's range between 8 to 25 % [1, 10, 11].

ACKNOWLEDGMENT

The authors would like to thank the Research and Development Sector at the Technical University of Sofia for the financial support.

REFERENCES

[1] Varocky, B. J., Benchmarking of regenerative braking for a fully electric car, TNO Automotive, Helmond & Technische Universiteit Eindhoven (TU/e), 2011, Report No. D&C 2011.002

[2] Boerboom M., 2012 Electric Vehicle Blended Braking maximizing energy recovery while maintaining vehicle stability and maneuverability. Master's Thesis in Chalmers' Automotive Engineering and in European Master of Automotive Engineering M. Boerboom Department of Applied Mechanics Division of Vehicle Engineering and Autonomous Systems Vehicle Dynamics Group CHALMERS UNIVERSITY OF TECHNOLOGY Göteborg, Sweden 2012

[3] DeMers, S. M., "Mechanical and Regenerative Braking Integration for aHybrid Electric Vehicle", Canada, Master of Applied Science in Mechanical Engineering, 2008

[4] N. L. Hinov, D. N. Penev and G. I. Vacheva, "Ultra capacitors charging by regenerative braking in electric vehicles," 2016 XXV International Scientific Conference Electronics (ET), Sozopol, 2016, pp. 1-4. doi: 10.1109/ET.2016.7753484

[5] Cody, Jarrad & Göl, Özdemir & Nedic, Zorica & Nafalski, Andrew & Mohtar, Aaron & Hamowania, Odzyskiwanie & Elektrycznych, W. (2009). Regenerative braking in an electric vehicle.

[6] Maliye, Sagar & Satapathy, Pragyanpriyanka & Kumar, Sudeendra & Mahapatra, Kamalakanta. (2014). Regenerative and Anti-Lock braking system in electric vehicles. 1019-1022. 10.1109/ICACCCT.2014.7019250.

[7] Hsu, T. (2013). On a Flywheel-Based Regenerative Braking System for Regenerative Energy Recovery. ArXiv, abs/1311.6012.

[8] Chen, C.-H., Wen-Chun Chi, & Cheng, M.-Y. (2011). Regenerative braking control for light electric vehicles. 2011 IEEE Ninth International Conference on Power Electronics and Drive Systems. doi:10.1109/peds.2011.6147317

[9] Xiaohong Nian, Fei Peng, & Hang Zhang. (2014). Regenerative Braking System of Electric Vehicle Driven by Brushless DC Motor. IEEE Transactions on Industrial Electronics, 61(10), 5798–5808. doi:10.1109/tie.2014.2300059

[10] Malode, S.K., & Adware, R.H. (2016). Regenerative Braking System in Electric Vehicles. International Research Journal of Engineering and Technology (IRJET) Vol. 03 Issue 03

[11] Abhale, Y., Nigam, P., (2015). Review on Regenerative Braking Methodology in Electric Vehicle. International Journal of Advanced Research in Electrical, Electronics and Instrumentation Engineering (IJAREEIE) Vol. 4 Issue 7

[12] Guo, J., Wang, J., & Cao, B. (2009). Regenerative braking strategy for electric vehicles. 2009 IEEE Intelligent Vehicles Symposium. doi:10.1109/ivs.2009.5164393

[13] Karteek, Y.V.P., Dr. Kumar, N.P., (2016). Transfer Function Model Based Analysis of Permanent Magnet Synchronous Motor with Controllers. International Journal of Innovative Research in Electrical, Electronics, Instrumentation and Control Engineering (IJIREEICE) Vol. 4 Issue 16

[14] Yadav, V.K., Bhardwaj, N., "Regenerative braking for an electric vehicle using hybrid energy storage system", International Journal of Electrical and Electronics Engineering Research (IJEEER) ISSN 2250-155X Vol. 3, Issue 4, Oct 2013,pp. 35-42

[15] Kulkarni, S & Thosar, A. (2013). Mathematical Modeling and Simulation of Permanent Magnet Synchronous Machine. International Journal of Electronics and Electrical Engineering. 1. 66-71. 10.12720/ijeee.1.2.66-71.

[16] Hajare, R.N., & Thosar, A.G. (2014). Modeling and Simulation of Permanent Magnet Synchronous Motor using MATLAB. International Journal of Electrical Engineering ISSN 0974-2158 Volume 7, Number 3 (2014), pp. 413-423

[17] Huang, Qi & Chen, Yong & Li, Jian. (2010). Control of Electric Vehicle. 10.5772/10184.

[18] Burke, A. F. (2007). *Batteries and Ultracapacitors for Electric, Hybrid, and Fuel Cell Vehicles. Proceedings of the IEEE, 95(4), 806–820.* doi:10.1109/jproc.2007.892490

[19] Boekel, J.J.P. & Besselink, Igo & Nijmeijer, Henk. (2015). Design and realization of a One-Pedal-Driving algorithm for the TU/e Lupo EL. World Electric Vehicle Journal. 7. 226-237. 10.3390/wevj7020226.

[20] Mutoh, N., Hayano, Y., Yahagi, H., & Takita, K. (2007). Electric Braking Control Methods for Electric Vehicles With Independently Driven Front and Rear Wheels. IEEE Transactions on Industrial Electronics, 54(2), 1168–1176. doi:10.1109/tie.2007.892731

[21] Bozhilov, G. Transient processes and general theory of electric machines. 2007 Techincal University - Sofia